DL

Vertical Centrifugal Pumps

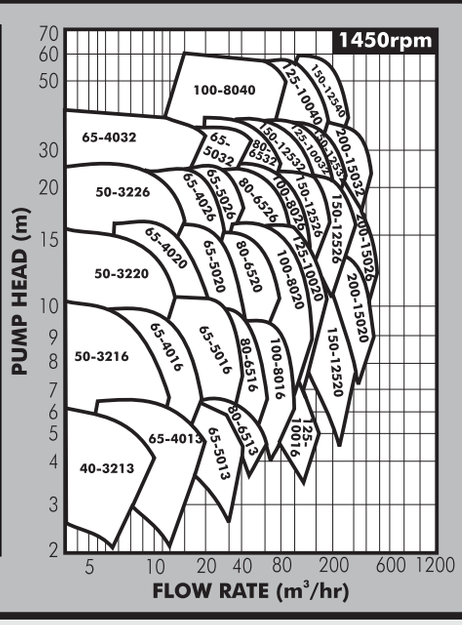

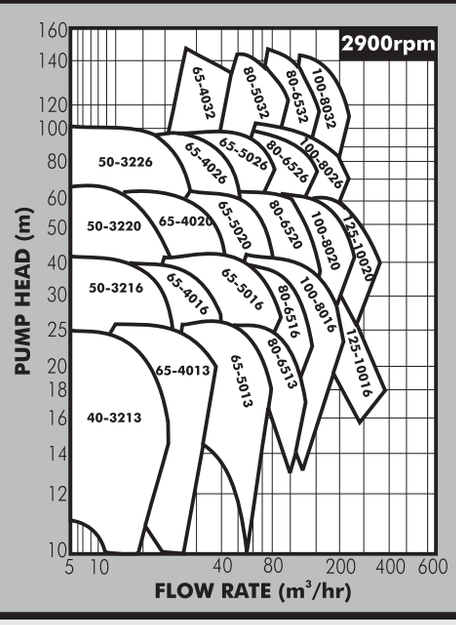

PUMP

The DAYLIFF DL range of vertical in-line closed impeller centrifugal pumps are rugged, heavy duty industrial products designed for various water supply, HVAC, cooling, irrigation and fire-fighting duties in agricultural, commercial and industrial applications. The close coupled vertical design ensures accurate alignment of the pump and motor and is especially suited to restricted spaces. A wide range is available, individual pump performance being adaptable to particular duty requirement by trimming the impeller size.

Standard materials of construction is cast iron casing, bronze impeller and stainless steel shaft, though other specifications are available to suit special applications. Pumps are fitted with mechanical seals.

Note that pump performance is indicative. Full performance details will be provided on provision of specific duty requirements.

OPERATING PARAMETERS

Pumped Liquid: Thin, clean, chemically, non aggressive water without solids or particles
Max Operation Pressure: 16bar
Max Temperature: 105°C

PUMP DATA

Model	Speed (rpm)	Motor (kW)	DN (mm)	Dimensions (mm)				Weight (kgs)
				H	H1	L1	W	
DL40	1450	0.55	40	407	113	152	310	48
DL50		3	50	498	118	173	470	99
DL65		11	65	743	155	231	590	211
DL80		15	80	795	175	235	640	246
DL100		30	100	909	220	249	800	436
DL125		45	125	989	240	284	810	524
DL150		75	150	1129	250	284	850	780
DL200		55	200	1055	300	285	920	647
DL40	2900	2.2	40	447	113	152	310	57
DL50		18.5	50	788	118	228	470	202
DL65		75	65	1188	155	273	590	618
DL80		90	80	1167	175	272	640	686
DL100		75	100	1166	188	271	630	663
DL125		90	125	1170	220	275	700	689

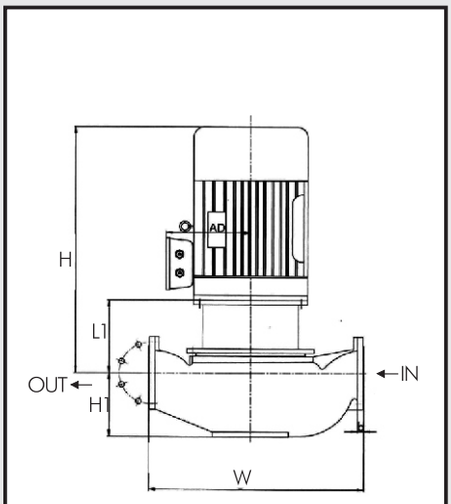

D&S DAVIS & SHIRTLIFF