WATER METERS

MJ

WP

PD

Installation & Operating Manual

INDEX

Congratulations on selecting a Dayliff Water Meters. They are manufactured to the highest standards and if installed and operated correctly will give many years of efficient and trouble free service. Careful reading of this Installation Manual is therefore important, though should there be any queries they should be referred to the equipment supplier.

1. SPECIFICATIONS

MJ

PD

WP

The various Dayliff water meter types are robust and economical designs for monitoring residential, commercial and agricultural consumption. All meters are remote monitoring enabled and pulse cables are available on request. Sizes are available from DN15 to DN100 in three different ranges as follows:-

MJ

A high precision and reliable multi jet dry type water meter designed for general water supply metering applications. It features magnetic drive for lower transmission resistance, a magnetic shield for external magnetic field protection and a sealed dry dial to ensure clear and easy reading. The body is made from composite plastic for DN15 and DN20 sizes and brass for larger sizes. Meters are supplied with inlet strainers and union connectors.

PD

Rotary piston type meters that provide high accuracy over a wide flow range. The mechanical transmission movement provides reliability and the liquid sealed register provides easy and clear reading. Meters are fitted with internal strainers, non return valves and union connectors and the bodies are made from composite plastic (15mm size) and corrosion resistant steel for other sizes.

WP

A heavy duty meter with flange connections for bulk flow applications featuring magnetic drive, a dry dial for clear reading and a removable measuring mechanism that can be maintained without removing the meter body. The body is made from cast iron with epoxy coating.

PERFORMANCE DATA

	MJ					PD		WP			
	15	**20**	**25**	**32**	**40**	**15**	**20**	**50**	**65**	**80**	**100**
Rated Flow (m^3/hr)	1.5	2.5	3.5	6	10	1.5	2.5	15	25	40	60
Max. Flow (m^3/hr)	3	5	7	12	20	3	5	30	50	80	120
Min. Flow (l/hr)	30	50	70	120	200	15	25	7.5	12.5	20	30
Pressure Rating (bar)	16	16	16	16	16	10	16	16	16	16	16
Max. Operating Temp (^{0}C)	40	40	40	40	40	40	40	50	50	50	50
Max. Pipe Size	½″	¾″	1	1¼″	1½″	½″	¾″	2″	2½″	3″	4″
Pressure Loss at Rated Flow (bar)	0.2	0.25	0.25	0.24	0.2	0.2	0.25	0.02	0.015	0.034	0.038
Pressure Loss at Max. Flow (bar)	1	1	1	1	0.9	1	1	0.08	0.08	0.015	0.125
Max. Reading (m^3)	99999.999					9999.9999		999999			
Accuracy Class	B					C		B			

DIMENSIONS AND WEIGHTS

	MJ					PD		WP			
	15	**20**	**25**	**32**	**40**	**15**	**20**	**50**	**65**	**80**	**100**
Body thread (D)	¾″	1″	1¼″	1½″	2″	¾″	1″	-	-	-	-
Connector thread (d)	½″	¾″	1″	1¼″	1½″	½″		-	-	-	-
Flange size (mm)	-	-	-	-	-	-	-	165	185	200	220
Body Length, L (mm)	165	190	260	260	300	115	130	200	200	225	250
Overall Length, L1(mm)	259	294	380	384	431	209	234	-	-	-	-
Height, H (mm)	106	107	118	118	142	96	96	256	266	276	286
Width, W (mm)	98	98	98	98	122	96	96	165	185	200	220
Weight with connectors (kgs)	0.7	0.8	2.9	3.7	6.1	0.6	1.48	12	13	16	18

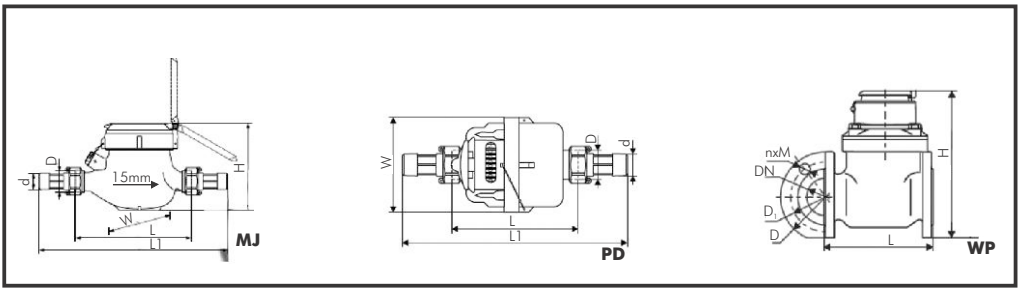

2. SYMBOLS & WARNINGS

Service lines, valves, connections and meters must be water tight.

Check local codes and regulations before the meter is removed for service, replacement, or installation. Settings must be checked for electrical continuity through the service pipe (provided the pipe is metallic).

Instructions should be carried out by a qualified professional with parts/ equipment approved by the local codes and regulations.

Meter must not be used as a lever or crowbar to straighten misaligned piping.

Meter shall not be set into a meter opening which is too long or force the piping into place with the coupling nuts on the meter setting. This can cause serious damage to the threaded ends of the meter and to the meter itself

Indoor residential meters may be located in basements, crawl spaces, utility rooms or in a garage.

NOTE

The meter installation should include a valve downstream from the meter to prevent water loss during meter servicing or removal from the line.

NOTE

The system should be installed so that the meter can be read at a convenient outdoor location. For meters that are located indoors, a remote reading system is recommended. This eliminates access problems and avoids customer complaints concerning strangers entering the home.

WARNING

Before starting any disassembly operation, the water line must be depressurized. Removing a meter that is under line pressure can result in serious personal injury

3. INSTALLATION

- The meter is a precise measuring device and although robust in design and construction, should be handled, transported, and installed with care. The meter should remain within its protective packaging to the point of installation.
- Storage temperatures shall remain within the range of -20°C to +60°C , avoiding direct sunlight.
- Special fittings and accessories are available to provide easier meter installation and proper alignment.
- All meters should be installed according to local standards or water utility regulations.
- Close the meter's inlet-side valve.
- Open a faucet and wait until water flow stops to depressurize the system. Do not remove the meter until the flow stops.
- Check valves and make necessary repairs to shut-off valve or inlet side valve if necessary.
- For proper sealing, use new meter gaskets when changing the meter.
- Do not use thread sealant, pipe dope or meter coupling threads, meters are sealed by the gasket only.
- Close the meter's outlet-side valve. Protect the floor below the meter against potential spills or leaks that could occur. Protect the coupling area from debris so that the new meter will not be contaminated or damaged.

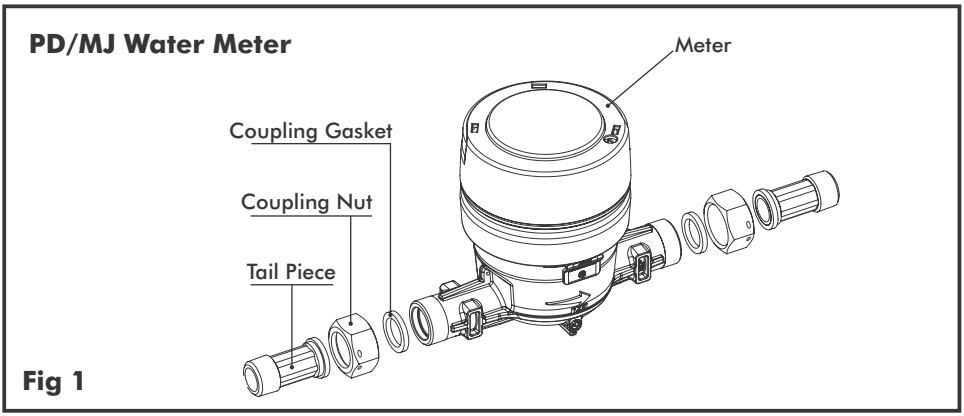

MJ/PD Meter Installation

- When replacing an existing water meter, loosen meter couplings and remove the meter and the old gaskets in the coupling nuts.
- Clean the coupling nuts, removing any dirt from the threads.
- Verify the existing setting for proper alignment and spacing. Correct any misalignment and spacing in the setting.
- Place the connection gaskets inside the connection coupling nuts. Use rubber gasket hardness of 80-90 Shore A.
- Set the meter between the coupling nuts, properly positioned so that the flow indication/arrow on the meter housing points in the direction of flow.
- Start the coupling nuts at the threaded meter ends. Verify that the coupling nuts are properly aligned to avoid cross threading damage (stripping) to the meter ends. This is especially important for the engineered composite/polymer meter.
- The best method for properly starting meter coupling nuts is to position the nuts squarely against the meter end. Turn the nut counterclockwise (in reverse) while holding the nut against the meter end. When the first threads on both the coupling nut and the meter spud end coincide, a slight click will be heard and the movement of the nut into the starting position will be felt. At this point, turn the nut clockwise to complete the connection.
- In a good installation, this can be accomplished by turning the nut by hand until it is tight. When firmly hand tight, apply an additional ¼ to ½ turn using an open-end wrench with a short handle.

DO NOT over tighten.

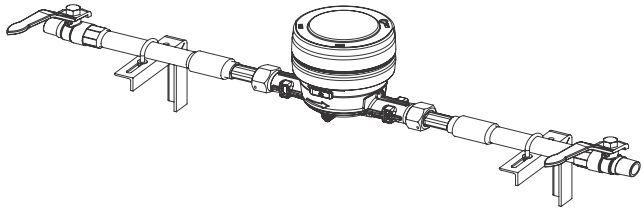

Fig 2

The meter can be damaged if subjected to full flow conditions prior to expelling all the air from the pipeline.

- After installation is complete and prior to opening the upstream/inlet water valve ensure that the valve on the downstream/outlet side of the meter is shut.
- In case the main/service shut-off valve is closed, open it slowly to pressurize the service line to the meter setting. Air in the lines may damage a meter and other equipment. Water hammer from a quick turn-on can damage plumbing and appliances or cause a water line rupture.
- Slowly open the inlet side valve which will fill the meter with water. Once the water is flowing fully open the meter inlet valve . Partially open valves can render the meter inaccurate and lead to low water pressure.
- Check for leaks around the meter and connections. Open a downstream/consumer faucet to allow entrapped air to escape once the outlet valve is opened. Open the meter outlet side valve slowly to pressurize the downstream/ consumer side of the system. Turn off the consumer faucet when normal water flow occurs.
- Ensuring that all consumer faucets are shut, observe the low flow detector in the meter to identify downstream leaks in the consumer's system.

WP Installation

- The meter must be installed with the direction of the flow as indicated by the arrow cast in the meter body.
- In order to keep the water meter in good working condition, the pipeline should be cleared before installation.
- A horizontal position with the register face upwards is recommended.
- The meter must have 10 diameters straight pipe ahead of the meter and 5 diameters straight pipe after to ensure proper flow through the meter.
- The valves must be installed in the front and the back of the water meter.
- Attention should be paid that a cold water meter must not be used for hot water..
- It is recommended to install a filter before water meter.

WP Bulk Water Meter

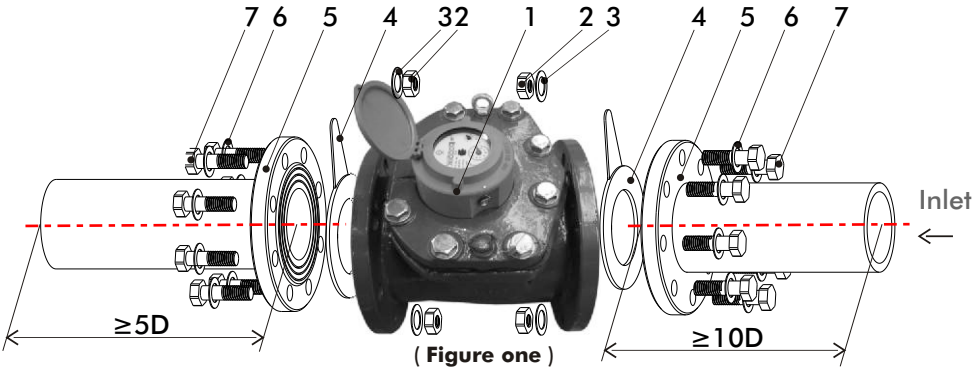

(**Figure one**)

1. Water meter
2. Nut
3. Gasket 1
4. Gasket 2
5. Pipeline
6. Gasket 3
7. Screw

Fig 3

4. OPERATION AND MAINTENANCE

- Provide an upstream and downstream shut-off valve of high quality and with low pressure drop. A valve before the meter will allow local shutoff of the water if change or repair is later needed. A valve or check valve on the outlet side of the meter will keep water from draining from the building when changing or removing the meter.
- Provide a drain cock between the meter and the downstream valve.
- In general, install the meter horizontally in the line to obtain optimum performance as shown in Fig 2. Volumetric meters may also be installed vertically or at an incline.
- Ensure that the installed meter will be easily accessible for reading, inspection, and service.
- Protect the meter and piping against flooding, mechanical damage and tampering.
- The installed meter must not be an obstacle or a hazard to the customer or interfere with public safety.
- Always flush the upstream and downstream piping prior to installation. Ensure that the water in the pipes is completely free of debris.

NOTE

Standard water meters are for cold potable water. Enquire for hot water (temperatures greater than 50°C).

- Most meters are rated to 16 bar. If there is a pressure regulator, verify that the regulator works and is adjusted correctly.
- The service pipe entering and exiting the meter box should be properly bedded to ensure that it is not axially misaligned. Ensure that pipe alignment is maintained so that the service pipe or meter will not be damaged by eventual ground shifts.

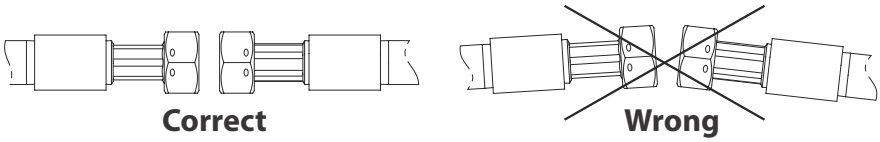

Fig 4

5. TERMS OF WARRANTY

i) General Liability

- In lieu of any warranty, condition or liability implied by law, the liability of Dayliff in respect of any defect or failure of equipment supplied **is limited to making good by replacement or repair** (at the Company's discretion) defects which under proper use appear therein and arise solely from faulty design, materials or workmanship within a specified period. This period commences **immediately after the equipment has been delivered to the customer** and at its termination all liability ceases. Also the warranty period will be assessed **on the basis of the date that the Company is informed of the failure.**
- This warranty applies solely to equipment supplied and **no claim for consequential damages,** however arising, will be entertained. Also the warranty specifically excludes defects caused by fair wear and tear, the effects of careless handling, lack of maintenance, faulty installation, incompetence on the part of the equipment user, Acts of God or any other cause beyond the Company's reasonable control. Also, any repair or attempt at repair carried out by any other party **invalidates all warranties.**

ii) Standard Warranty

General Terms

If equipment failure occurs in the normal course of service having been competently installed and when operating within its specified duty limits warranty will be provided as follows:-

- **Up to six months - The item will be replaced or repaired at no charge.**
- **Over 6 months, less than one year - The item will be replaced or repaired at a cost to the customer of 50% of the Davis & Shirtliff market price.**

The warranty on equipment supplied or installed by others is conditional upon the defective unit **being promptly returned free to a Davis & Shirtliff office** and collected thereafter when repaired. No element of site repair is included in the warranty and any site attendance costs will be payable in full at standard chargeout rates. Also proof of purchase including the purchase invoice must be provided for a warranty claim to be considered.

DAYLIFF is a brand of **Davis & Shirtliff**
for enquiries contact
Davis & Shirtliff, Ltd.
P.O. Box 41762 - 00100, Nairobi, Kenya
Tel: 6968000/ 0711 079 000
or visit
www.davisandshirtliff.com
for details of the nearest branch or stockist

INS450A-02/20