DAYLIFF

MOBILE VACUUM CLEANER

Installation & Operating Manual

INDEX

Congratulations on selecting a Dayliff Mobile Vacuum Cleaner System. They are manufactured to the highest standards and if installed and operated correctly will give many years of efficient and trouble free service. Careful reading of this Installation Manual is therefore important, though should there be any queries they should be referred to the equipment supplier.

1. SPECIFICATIONS

The Dayliff mobile cleaner is a manual pool cleaner with particular application in heavy duty pool cleaning.

It comprises DPL 750 pump connected to DX300 filter mounted on a movable trolley.

It is used in conjunction with floating hose, vacuum head and a handle which are provided on request.

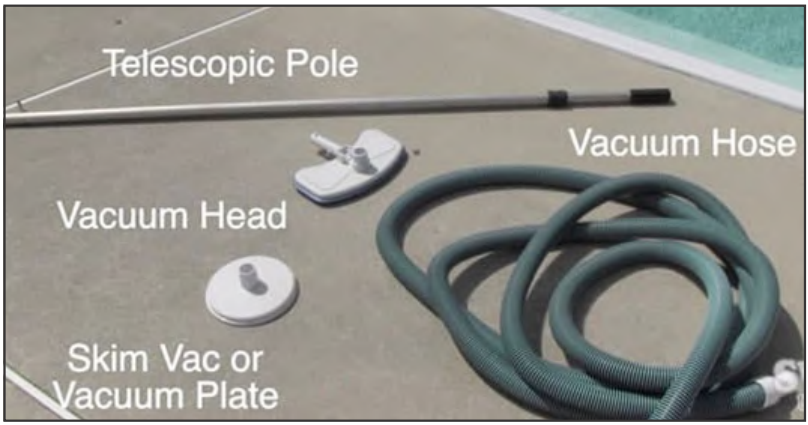

Fig. 1 Mobile Vacuum Cleaner Accessories

Filter

Model	Filter Area (m^2)	Dimension (mm)			Pressure Bar		Weight (kg)		
		H	D	L	Test	Working	Net	Gross	Media
DX300	0.07	830	300		4.5	3.0	11	115	50

*** Gross weight includes media and water**

DPL Pump

Model	Speed (RPM)	Power (kW)	Current (kW)	Dimensions (mm)					Weight (kg)
				DN1/DN2	A	B	D	H	
DPL 750	2800	0.75	5.8	50	550	238	345	330	13

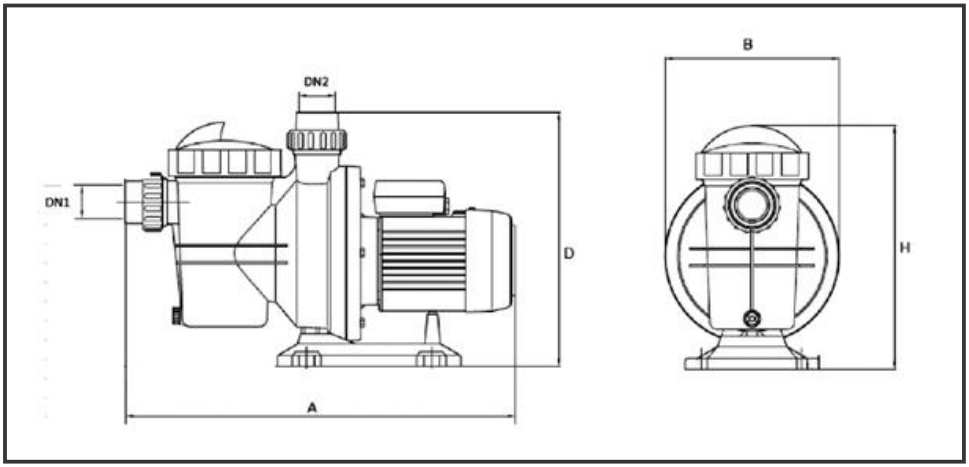

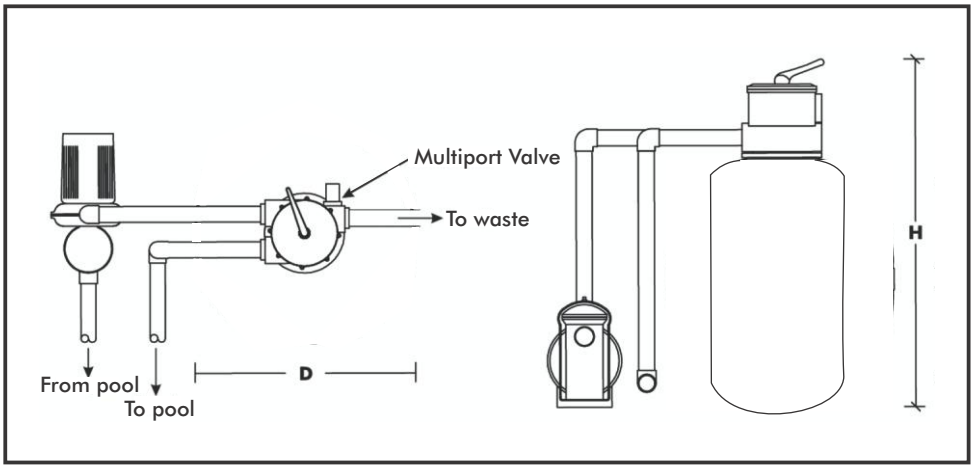

2. INSTALLATION

2.1 Vacuuming the pool

Part of routine maintenance of a swimming pool includes vacuuming which involves cleaning debris that has settled onto the pool floor. In some instances, flocculant is used to clear suspended water clouding particles by forcing them to quickly settle onto the floor.
Depending on the condition of the pool, a choice can be made to either vacuum to waste or to recirculate the filtered water back to the pool. With the former, water must be added to restore the proper level in the pool and in turn, this addition of fresh water necessitates testing and correcting the chlorine and pH balance in the pool.

2.2 Piping/Hose Connections

- Connect the vacuum hose to the suction end of the pool pump via an appropriate hose connector.
- Connect the second hose to either the outlet pipe provided on the vacuum cleaner or the waste end of the multiport valve of the DX300 filter.
- Prime the suction vacuum hose line by completely filling it with water. This can be done by filling up water in the suction vacuum line via the pump basket with the hose inside the pool and the opposite end raised slightly above water level.
- Secure the hose and the aluminum handle to the vacuum head and submerge the vacuum head such that it rests on the pool floor.
- Set the multi-port valve on the DX300 filter to either filter or waste depending on the condition of the pool.

The pipe connections must be correctly done as shown above. Hand tightening is adequate for the MPV unions and under no circumstances should a pipe wrench be used. If the union weeps, add more thread tape on the union threads and make sure to check that the union O-ring is in place.

3. OPERATION

3.1 Use of Multiport valve

A typical multiport filter valve has six settings: Filter, Rinse, Recirculate, Backwash, Waste and Closed. When vacuuming with the mobile vacuum cleaning unit, the choice of settings depends upon the amount of dirt or other contamination in the pool. Routine levels of particulates in a pool can usually be vacuumed with the multiport valve turned to the Filter setting while directing the vacuumed water into the filter then back to the pool through the return lines.

In some cases, it is not recommended to recirculate vacuumed water from the pool through the sand filter. Where pool water is loaded with live algae or where dirt or dust has infiltrated a covered, unused pool and formed a thick layer on the bottom, overloading the filter with waste may clog the filter media. In addition, algae that has been “shocked” and killed with a high dose of chlorine can pass through the sand filter media and re-enter the pool. If flocculants have been used to clear the pool, it's advisable to vacuum to waste.

Particulates picked up by the vacuum are removed from the water by the bed of sand filtration media inside the filter. Because vacuuming may deposit a concentrated amount of dirt and other particulates in the sand filter media, it is advised to backwash the filter after vacuuming.

3.2 Media Charging

The filter is provided with suitably graded media which should be poured into the filter as per the details given below

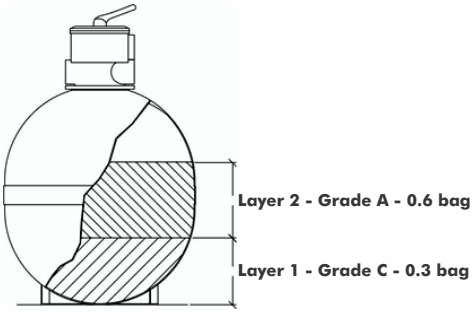

Fig. 2 Media Filter

***Each standard DAYLIFF media bag is 1ft^3 (0.03m^3) & weighs appox. 50 kgs**

When charging proceed as follows:-

- Disconnect the inlet, outlet and backwash pipes from the Multiport Valve at the union connectors.
- Unscrew and remove the Multiport Valve clamp and lift out the valve, which is sleeved on to an extension from the bottom collector pipes. This pipe should now be blocked with paper or a cloth to prevent the ingress of media during charging.
- Charge with media as per the instructions given above.
- Replace the Multiport Valve ensuring that both the valve neck and collector O-rings have first been smeared with petroleum jelly. Note this should be done whenever the Multiport Valve is removed. It is also important to ensure beforehand that all sand has been removed from the filter O-ring seat and the O-ring itself to prevent leakage.
- Rotate the Multiport Valve to align the outlet ports with the piping and ensure proper seating. When properly seated the clamp should be secured ensuring even but not over tightening of the clamp bolts. If the joint weeps under pressure, reseat the MPV in a different position ensuring it is properly seated on the filter neck. Over tightening will damage the filter.

3.3 MPV Operation

DAYLIFF filters are fitted with a Multiport Valve to control filter operation. There are six positions on the valve and the various operations possible with the different settings are described below.

FILTER

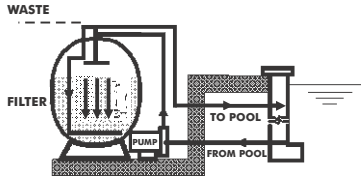

The normal operating position. Water from the pump is fed into the top of the filter and after passing through the media is collected at the bottom. It is then returned to the pool through the inlet pipes.

BACKWASH

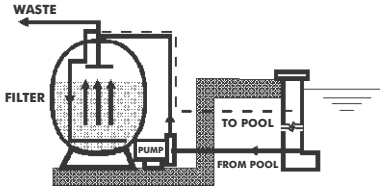

During normal operation the filter will accumulate dirt in the media bed. This is cleaned by a process of backwashing when the filter flow is reversed and water is pumped from the bottom to the top of the filter and then to waste. It should be carried out whenever the filter pressure exceeds the clean running pressure by 0.3Bar, there is a noticeable reduction in inlet flow or weekly, whichever is the sooner. The backwashing process normally takes 2-3 minutes and should be continued until the waste water is observed as clean.

RINSE

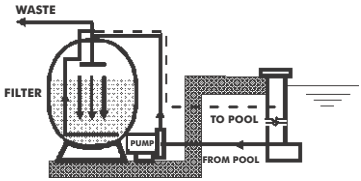

After backwashing the filter media needs to be rinsed. Water is pumped into the top and out of the bottom of the filter as for normal filtering, but it is then discharged to waste. This removes any residual dirt in the media instead of returning it to the pool. Rinsing should not take more than one minute and again the sight glass on the side of the valve can be used to see when the water is clear.

RECIRCULATE

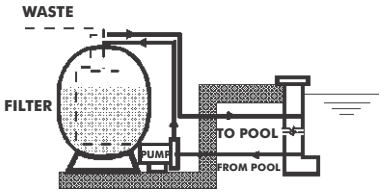

In this position the filter is by-passed and the water is pumped straight to the delivery point. It will normally only be necessary to use this position if there is a problem with the filter itself (e.g. a leak or major blockage). It can also be used to test the filtering pressure drop by comparing normal filtering pressure with recirculation pressure.

WASTE

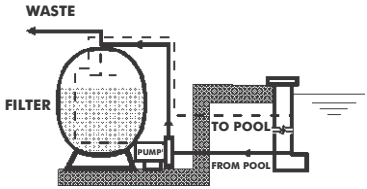

The waste position is used for bye-passing the filter to waste. In swimming pool applications make sure that the pump is not switched off once the operation has began as there may be problems with priming when the water level is below the pump. This position can also be used for vacuuming to waste. This may be necessary if there is a large amount of sediment on the floor of the pool which would rapidly clog the filter in normal operation.

CLOSED

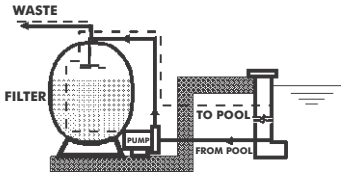

This shuts off all flow to the filter. In pool applications it is most frequently used to isolate the filter when removing the line strainer lid to clean the basket.

3.4 Commissioning

When commissioning, the following procedure must be followed to ensure the MPV is properly working:-

- Open all suction valves and ensure that the pump strainer is filled with water.
- Open any valve on the return side of the filter.
- Set Multiport Valve to 'BACKWASH' and start pump.
- Check flow at the backwash pipe and allow the pump to run until the backwash water is observed as reasonably clean, a minimum of five minutes being recommended. This step is essential as the filter media is not fully pre-washed and this procedure rinses the new sand clean. Note that as the filter is initially empty it will take time to fill and there will be a delay of a minute or two from when the pump is switched on to when flow is observed.
- Stop pump and turn MPV to 'RINSE'.
- Start pump and allow media bed to rinse until waste water is observed as clean. Stop pump and turn MPV to 'FILTER'.
- Start pump and allow system to operate until a steady flow is noticed at the pool inlets. As the system is not primed it will take time for all air to be bled, so be prepared for a delay of up to ten minutes before a steady flow is apparent.

WARNING

Under no circumstances should the position of the Multiport Valve be changed when the pump is running. Always switch off the pump first or serious equipment damage may result.

3.5 Vacuuming process

- Plug in the mobile vacuum cleaners pump power supply cable to the socket provided.
- Switch ON the pump.
- With the hose and the handle firmly secured onto the vacuum head, gently use long and slow sweeping strokes to vacuum the pool starting from the shallow end. Make sure the strokes overlap slightly to avoid leaving any debris behind.

4. MAINTENANCE

The Dayliff mobile vacuum cleaner needs no routine maintenance other than regular backwashing. Over time, the media will progressively clog and become less effective. The period will depend on usage. Ineffective media becomes apparent through reduced filter efficiency and when this occurs, re-charging with new media will be required.

5. TROUBLE SHOOTING

FILTER

PROBLEM	POSSIBLE CAUSE	SOLUTION
Water coming out not clear	Flow rate very high	Regulate flow rate to optimal levels to ensure adequate filtration time
	Filter not working well	Check that the filter is in good condition
	Clogged sand filter	Back wash the filter
Low clean water flow	Feed pump not working well	Check that the pump performance has not dropped drastically
	Filter clogged	Back wash the filter
	System's pipeline clogged	Check that the pipeline is not clogged and clean pipe if it's the case
	Feed pump failed	Repair or replace the pump
No water supply at all	Feed pump failed	Repair or replace the pump
	Valve arrangement control	Check the right valves have been closed or opened for the right process operation
	Filter clogged	Backwash the filter

6. TERMS OF WARRANTY

i) General Liability

- • In lieu of any warranty, condition or liability implied by law, the liability of Dayliff (hereafter called the Distributor) in respect of any defect or failure of equipment supplied **is limited to making good by replacement or repair** (at the Distributor's discretion) defects which under proper use appear therein and arise solely from faulty design, materials or workmanship within a specified period. This period commences **immediately after the equipment has been delivered to the customer** and at its termination all liability ceases. Also the warranty period will be assessed **on the basis of the date that the Distributor is informed of the failure.**

- This warranty applies solely to equipment supplied and **no claim for consequential damages,** however arising, will be entertained. Also the warranty specifically excludes defects caused by fair wear and tear, the effects of careless handling, lack of maintenance, faulty installation, incompetence on the part of the equipment user, Acts of God or any other cause beyond the Distributors's reasonable control. Also, any repair or attempt at repair carried out by any other party **invalidates all warranties.**

ii) Standard Warranty

If equipment failure occurs in the normal course of service having been competently installed and when operating within its specified duty limits warranty will be provided as follows:-

- **Components making up the plant or system are covered individually under the specific item's warranty terms.**
- **Consumable e.g. cartridges are not covered by warranty.**

The warranty on equipment supplied or installed by others is conditional upon the defective unit **being promptly returned free to a Davis & Shirtliff office** and collected thereafter when repaired. No element of site repair is included in the warranty and any site attendance costs will be payable in full at standard charge out rates. Also proof of purchase including the purchase invoice must be provided for a warranty claim to be considered.

DAYLIFF is a brand of **Davis & Shirtliff**
for enquiries contact
Davis & Shirtliff, Ltd.
P.O. Box 41762 - 00100, Nairobi, Kenya
Tel: 6968000/ 0711 079 000
or visit
www.davisandshirtliff.com
for details of the nearest branch or stockist

INS462A-09/20